THIS DRAWING ITS CONTENTS AND INFORMATION, ARE CONFIDENTIAL, AND THE PROPERTY OF ROBART MFG. INC. IT MAY NOT BE USED, COPIED, AND / OR TRANSMITTED TO ANY PERSON, FIRM, OR CORPORATION WITHOUT THE PRIOR WRITTEN APPROVAL OF ROBART MFG. INC.

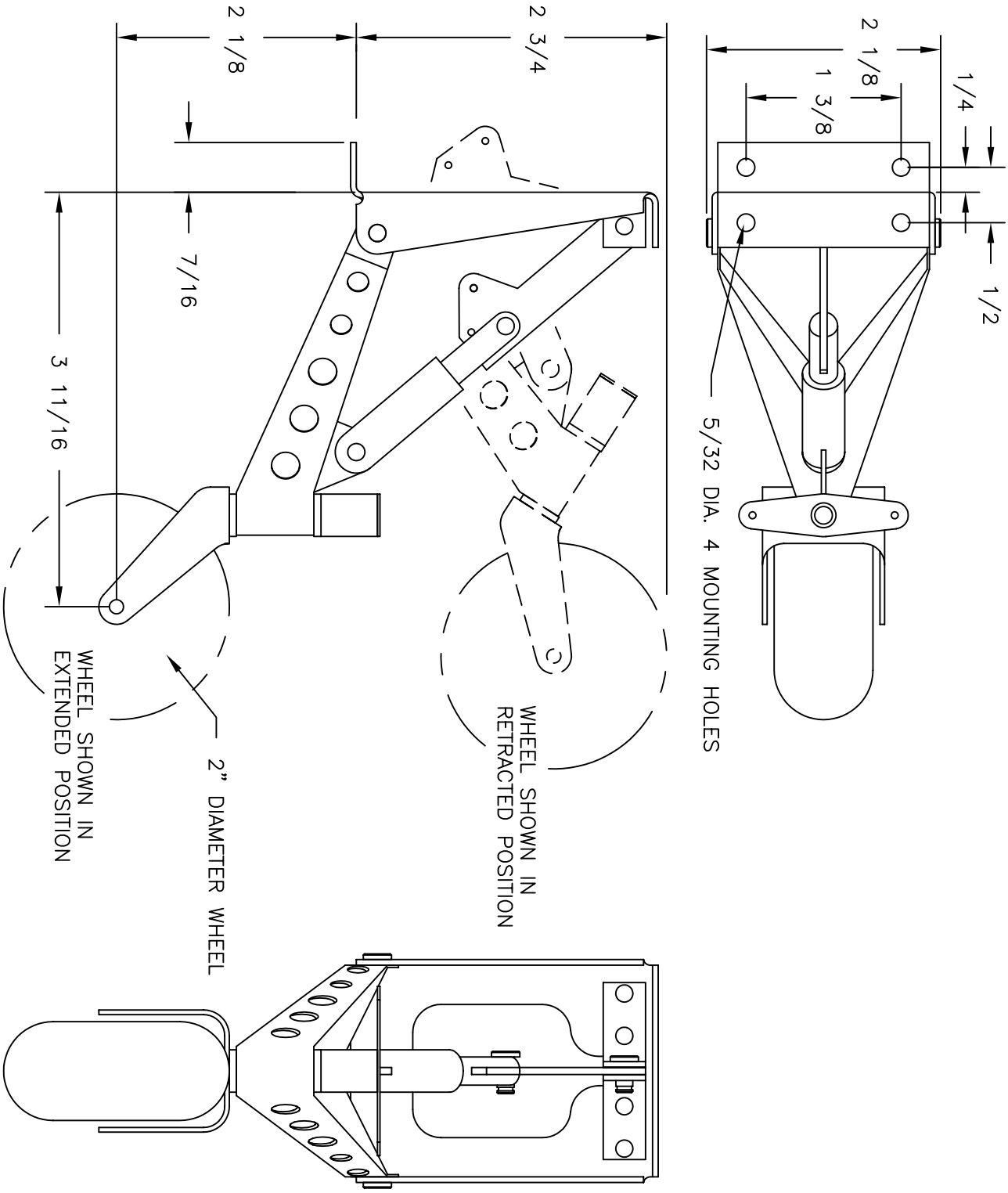

RETRACTABLE TAIL WHEEL OPERATIONAL DETAILS

robart MFG. INC
625 N. 12th ST.
ST. CHARLES IL.

DRAWING No. 160-000

REV.